EDITORIAL

Trade-Mark Registered and Contents Copyrighted, Earl R. Allured
Subscription Price, $3.00 the year. Single Issues, 50 cents.

A Specialized Technical and Commercial Magazine for Confectionery Superintendents, Purchasing Agents and Executives

Published Monthly on the 15th by
The MANUFACTURING CONFECTIONER PUBLISHING CO.
30 North La Salle St., Stock Exchange Bldg.
CHICAGO

New York Office, 5 Cortland Street., R. W. Younie, Mgr.

EARL R. ALLURED,
Editor - Publisher.

M. BENNET KOVNAT,
Vice President.

PRUDENCE M. WALKER,
Circulation Manager.

Mergers vs. Monopolies

—their Significance to the Purchasing Department.

Probably the biggest factor in present-day purchasing is the trend toward consolidation. In many instances this leads to a more economical distribution and therefore to better service at lower prices. Often, however, especially with food materials, there is great danger that consolidation may be carried too far, resulting in monopolies which might absolutely control the necessities of life. That the Federal government is awake to this danger is evinced by the firm stand which it has taken in opposition to the mergers of baking companies, packing houses, sugar refiners, canners, and grocery and dairy interests.

While we may fairly rely upon our government to regulate or dissolve the trusts which try to get their talons on the necessities of human life, we must plan to defend ourselves against those combines which attempt to monopolize the various materials essential to the life of our industry. Corn syrup and starch, for instance, have long been a closed book to us. Price-fixing in other materials is daily encountered, while everywhere the "cooperation" between competing firms is becoming a little too close for comfort (such cooperation, for example, as made possible the simultaneous withdrawal of guarantees on refined sugar contracts). There is even a well-substantiated rumor that a certain New Orleans investment syndicate is endeavoring at this very moment to bring about the consolidation of the importers, dealers, and import brokers who supply the confectionery trade.

Under these circumstances, the buyer is justified in using any means at his disposal to curb or break up these questionable combinations. Probably the most effective means is to check such tendencies at the start by encouraging competition and giving the little fellow a chance to keep alive. For instance, where one big house is practically in control of the field, with five or six smaller firms struggling for a foothold, it may pay in the end to favor the latter, at a slight premium if necessary, even though the big fellow is prepared to sell below cost until he has killed off his competitors.

There may be confectioners who consider that for some reason of policy they must buy their requirements from the dominant firm, but even these can allot some small portion of their business to the independent as an insurance against monopoly, without jeopardizing their relations with their regular supplier.

It is neither the purpose nor the desire of this editorial to condemn legitimate mergers, but at this time, when many of our essential materials are already in the hands of formidable combinations, it behooves us to separate the sheep from the goats and to encourage that competition which is the life of all trade.

Neglected Candy Outlets

ONE of the things that made Mother revered in the old time home was the delicious sweets she used to fix up to top off the daily dinner or the holiday feast.

The daily dinner is now taken in the form of an eat-and-run luncheon at some soda fountain, luncheonette, one-armed restaurant, or sandwich shop. All of these places could be made to serve as candy outlets.

The candy would have to be in small packages to be purchased in small units, just enough for the bite between the sandwich shop and the desk to which the customer is due back in fifteen minutes. And more important than the size of the package would have to be the matter of its accessibility. It can only be sold by folks who will trust the buyer to pick up his bit of candy and drop his nickel or his dime or perhaps his penny as we would buy a daily paper on the corner stands. This calls for the right kind of display fixtures which will in truth be Silent Salesmen.

In many cases we have seen cashiers in res-

taurants supposedly selling candy to top off the meal with, but they have kept the goods under glass cases, away from the customers' reach and hence out of the day's sales. The impulse to buy was there, but the necessity of interrupting the cashier for such a small purchase killed the sale. In the hurried mood of the customer the barrier of the necessary delay also would impose a sales resistance too great to overcome.

The moment of sales opportunity is when the customer has just paid his dollar bill, more or less, for his lunch, and received an assortment of quarters, dimes and nickels in return. A chocolate bar, a small pack of Scotch kisses, a bit of toffey or even a package of caramels priced at a nickel or a dime, appeals at that moment.

If, instead of putting his change in his pocket, he can drop a dime or a nickel and pick up his favorite form of sweets, the consumer customer is very likely to do so. If the change is once pocketed the sale will not be made. It is too much bother to get it out again and go through the major operations of a sales transaction.

Natkins Made It Pay

WE KNEW a man who worked out this idea with great success. His name was Natkins, and he was not a candy man or even a restaurant man. He was a real estate man who leased a site for a stand to an "orange drink" man who eventually defaulted his rent, but he had taught his landlord to like his orange drink. The landlord thought he had an idea. It was that the orange drink man did not know how to merchandise, although he did mix a fine, cooling orange drink.

Getting the stand back on his hands through defaulted rent, Mr. Natkins junked it and built one of white tile, with golden-brown decorations, in its place. Also plate glass where it would help. He made the stand the last word in attractiveness. And he saw the people come forward for the orange drink in great numbers.

But if a man's thirsty, he's probably hungry, too, argued Natkins. So he added a little "hot doggery" in one corner of his stands. One could get a roll and weinerwurst along with his glass of orange juice. He bought a famously good brand of quality "dogs," too. And he always served pure orange juice—never synthetic substitutes.

He spread out his stands until he had 150 of them in New York, known to the public as "Nedick," and another 150 were there, run by imitators of his system.

The Little Sweet Finishing Touch

THEN Natkins had another idea. If men were hurried and thirsty and hungry, too, when they came to his stands, they would like that little "sweet touch" at the end of their meal. But the candies he might offer must be very accessible, and in lots costing a dime or less.

What were available? He designed a little stand himself to sit on the main corner at such an angle that it would best display small bits of assorted candy specialties. Through a glass front, selling the idea of protection from dust, the customer saw the appetizing candies in convenient small units. And just below the display he saw half a dozen paper bags filled with them. *A customer could pick up the bag, drop his dime, and go on his way.*

It worked—enormously. The variety of candies was enlarged until it took in a dozen kinds or more—all quality goods. Now the weekly sales sheets for candies at the Nedick stands even exceeds the orange juice sales. This man built up a side line until it came to be an enormous business by itself.

Candy Advertising Campaign Off to a Good Start

From N. C. A. Bulletin, March 5, 1926.

The first presentation of the candy advertising campaign to the members of the Western Confectioners' Association at their annual convention in Seattle in January was a great success. Approximately 20 per cent of their three-year quota was pledged from the convention floor.

The quota of the Western states is $50,000 a year, or $150,000 for the three years. Following the convention, Mr. H. R. Wilson of the Fisher-Brown Advertising Agency presented the plan at zone meetings in Tacoma, Portland, San Francisco, Los Angeles, Salt Lake City and Denver. Upon his return East and prior to any canvassing having been done by the finance chairmen and their committees, and with 50 per cent of the National Association members yet to hear from in the Western states, there had been pledged in the neighborhood of $75,000, or approximately 50 per cent of their three-year quota.

Telegraph reports since received give assurance of their total quota being raised in the very near future. The following extract from a telegram from A. J. Bale, president of the Western Confectioners' Association, to the members of the Advertising Committee will interest you: "We challenge the Eastern manufacturers to match the spirit of the West in terms of dollars and cents."

The second presentation of the plan was before the members of the Midland Club, February 18. No pledges were asked at this meeting, but the meeting went on record unanimously approving the plan and the motion was made that everyone who voted for the plan did so with the implied promise of their financial support.

Other group meetings are being arranged for in different sections of the country and will be announced later.

This is one of the biggest and most important undertakings of your association and we are looking for the help and financial support of all.

The committee in charge hopes to fully complete its financing by the time of the Annual Convention in May, as it is planned to start the educational campaign in the early summer and the consumer advertising in the magazines by the time school opens in the fall.

WALTER C. HUGHES,
Secretary.

Annual Meeting of Midland Confectioners' Association

Sherman Hotel, Chicago, February 17-18, 1926

AT THE Midland Confectioners' Association's annual meeting, held at Chicago last month, the following officers were elected: E. B. Hutchins, The Bonita Co., of Fond du Lac, Wis., president, to succeed A. R. Scheble; H. H. West, Loose Wiles Co., of Kansas City, and L. C. Blunt, W. C. Nevin Candy Co. of Denver, were elected vice-presidents.

An afternoon was given over to a "Quiz," which was generally participated in and brought out opinions on many phases of the sales problems of the industry. In addition to a sprightly discussion of the subjects on the program of the quiz, the members listened to addresses by Frank M. Hallenback, president of the Executives Club, Chicago; W. C. Hughes, secretary of the N. C. A.; President V. L. Price of the N. C. A.; Geo. L. Williamson, chairman of the N. C. A. sub-committee on the Cooperative Advertising Campaign, and H. R. Wilson of the Fisher Brown Advertising Agency, St. Louis, who presented the official plan for the Cooperative Advertising Campaign which is published in this issue. The Midland Confectioners' Association unanimously approved the plan.

E. B. HUTCHINS

Of the Bonita Company, Fond du Lac, Wis., Newly Elected President, The Midland Confectioners' Association.

The Program of the Candy Quiz

What's wrong in the confectionery industry and what are we going to do about it? The following program of the "quiz" session of the Midland meeting provided a very fair cross-section of conditions in the industry and the alternatives in the solution of the problems:

I. Some Important Developments in the Candy Industry Within Recent Years.

1. Large increase in volume of candy distributed by numerous chain, syndicate and other retailers who buy candy at prices materially below prices made to the general retail trade by manufacturers and jobbers.
2. Intensified development of the candy kitchen or direct sales by the manufacturer to the consumer of candy in identified package form, largely packed "while you wait."
3. Decrease in the sale of bulk goods by the regular jobber and the "independent" retailer.
4. Creation of cash and carry departments in wholesale houses for the protection of the business of the jobber and his retail customers against the competition of the retailer who buys at "jobbers prices."
5. Increase in hand to mouth buying with resultant large numbers of small orders and the lack of any large number of sizable orders from the retailer at established "retail prices."
6. Rapid increase of the number of very small irresponsible jobbers with little capital content with a few dollars gross profits per day and who can thus fill very small orders at cut prices and compete with the cash and carry wholesalers.
7. Widespread increase in the manufacture, sale and demand for candy in small packages under established brand names.
8. The expenditure of huge sums of money in advertising for the promotion of the sale of candy in small packages under advertised brands.
9. Over capacity of candy industry caused by war time expansion still further augmented by tremendous increase in capacity by manufacturers of advertised products.

(*Continued on page* 37)

The Full Text of the
Official Cooperative Advertising and Educational Plan

Selected and Approved by the Officers and Executive Committee of the National Confectioners' Association

Preface

The Executive Committee, pursuant to a Resolution passed at the Annual Convention of the Association held in Boston in June, 1925, wherein it was instructed to decide upon a Cooperative Advertising Plan for the Industry and to submit same to the members of the Association, herewith respectfully presents said plan and earnestly urges and recommends the cooperation of the members in financing the plan and thereby assuring its fulfillment.

The Agency in Charge

THE advertising will be handled by the Fisher-Brown Advertising Agency, St. Louis, Mo. This agency has a successful advertising record of twenty years and is a member of the American Association of Advertising Agencies.

Mr. H. R. Wilson of this agency, under direction of the Executive Committee, will have direct charge of the advertising. Mr. Wilson compared and presented the plan selected by the Committee and is particularly familiar with the question of candy advertising and conditions within the industry, and your Committee feels is especially qualified to direct the details of the advertising and educational work and to present the plan to the members.

Mr. Wilson will attend various zone meetings now being scheduled and will personally present the plan in detail and at these meetings will be able to further determine the views of members, and, it is hoped, will secure valuable suggestions to submit to the Executive Committee for consideration in formulating its final decision as to the advertising and work to be done.

Financing

The cost of the advertising and educational work, as approved by the Executive Committee, is estimated at $350,000 per annum, and the Committee feels that to assure the greatest benefit from the work it should be carried on for a period of three years.

Pledges will be asked to raise this sum annually for a period of three years and if each member contributes a reasonable amount, a tabulation made by the Treasurer shows that the sum can be raised without placing a burden upon any individual.

It is provided in the pledges that if the total sum raised is not sufficient, in the opinion of the Executive Committee, to justify undertaking the work, pledges will not be called.

If the total sum raised does justify procedure, then the pledges will be subject to call by the Treasurer of the Association, payable thirty days after such call, provided that call shall be made in any one year only for such amount as is pledged for that year; that is, if a pledge is made for three years, one-third of the total amount pledged may be called in the first year, one-third in the second year, and one-third in the third year.

If after the first year it is the opinion of the Executive Committee that the advertising should not be continued, then no calls will be made for pledges for the second and third years.

The President will appoint a Finance Committee made up from members in various sections of the country, and the duties of this Committee will be to assist the Executive Committee in securing pledges and the Committee will act under direction of the President.

All pledges will be sent to the President of the Association, who will keep a record of same for the Executive Committee.

The Plan and Its Purposes

There are two problems confronting our industry—"Over Capacity" and "Bad Competition," and the former is the cause of the latter. Few in the industry are satisfied with their profit results. So long as the capacity of the industry so greatly exceeds the consumption of

its products, we cannot hope for a betterment in conditions, competitive and otherwise.

The effort to build sales by price cutting and other concessions provides only a temporary sales benefit. In the end we must reckon with the relationship of consumption to productive capacity, or in other words, the law of supply and demand. Created demand can be of two kinds—that of an individual product advertised by an individual concern and that of products generally advertised by the industry, and it has been clearly demonstrated by other industries that cooperative advertising and educational work can be made to stimulate general demand and as a result of same, also bring about an improved competitive situation.

Those of you who went through the war period know what benefits came from having the consumption of your products in right relationship to your capacity to produce. You know that it automatically increased your profits and bettered your competitive situation. Since the war you have been gradually approaching a new condition. They call it "getting back to normal," but you have gone below normal because you have done nothing as an industry to stimulate the demand for your products, to put them in the right place in the public mind and to educate your jobbers, retailers and salesmen along modern productive lines of selling. It is not as if the effects of these cooperative efforts were untried and unproven. The idea is not new. What we are seeking to do is to follow in the footsteps of other industries which were left with the same post-war conditions and remedied them by cooperative effort. It is the only solution left *and when we consider that it is possible for us, as an industry, to do the same thing with a very reasonable and small cost to each of us, shouldn't we be willing at least to give it a trial?*

We think nothing of putting out a new salesman in an untried territory, of sacrificing a fair profit to get sales and doing lots of other things, including expense outlays, that are purely experimental; while in this case we have sufficient proof, through the experience of others, that the idea of cooperative advertising and educational work is practical and productive of desired results.

And in doing this we do not retard any individual's effort to promote the sales of his own products; but instead, make it easier and surer to exploit and put over his own plans for the betterment of his own business.

You can't grow a harvest in an unfertilized and uncultivated soil, nor can you build your business successfully in the face of unhealthy general underlying conditions.

The whole plan and scheme of things is to make it easier for you to do business at a profit by the creation of new consumer demand, by stimulating more constructive salesmanship on the part of your salesmen and the dealers in your products. You have products that you know have sales merit but you are unable to sell a satisfactory volume of these goods because somewhere down the line the sales effort necessary is missing, and either your own salesmen, your jobbers or your retailers fail to do their part and you are at their mercy.

The real salesman is the one who shows his customer how to sell that which he buys; the limit of every salesman's sales is what his customer feels he can buy and resell at a profit. The educational plan of this campaign will bring to the salesman ideas and opportunities that will help his customer, and to the customer a clearer idea as to that which he must do to build his sales.

What is it that makes our seasonable demands? It is consumer costum or habit. Is there any other reason for Easter than that the public have established the custom of buying certain kinds of candies at Easter time? There is no motive for an increased consumption of candy at Easter time, other than that the Easter idea has gone over with the public.

It is a very well-known fact that the public does respond to the right kind of suggestion whe nthe suggestion is backed up by a good reason and the holidays contain that reason.

The Christmas demand we all know about; but have we taken into consideration that during the Christmas season candy comes into competition with many other commodities that are used as Christmas gifts and that by advertising of the right kind we could increase even the Christmas demand for our products?

For years printed cards have been used, as a medium of remembrance, on St. Valentine's Day, which is a day upon which the custom of remembering others is thoroughly and well established. It is not our task to create the custom, but to direct the custom toward candy in the slogan, "Make Candy Your Valentine." The work already done by the Publicity Department of your Association, with the help of the manufacturers who have cooperated with this suggestion, has built large sales on this day and the opportunities for this day are unlimited.

The florists with their excellent slogan, "Say It With Flowers," found it necessary to tie up with that slogan some specific suggestion to the public and they selected Mother's Day, and it is well known what this one day has meant to the florists. And likewise Mother's Day has been made a medium through which the public

could express itself in gifts of candy. "Remember Mother Likes Candy, Too," has been an effective slogan and productive of big results for the confectioners.

Even Hallowe'en, though it hasn't the same consumer appeal, has become a well-established candy season. Each year a greater number of confectioners are preparing lines to fit into this season. With the slogan, "Witching Time Is Candy Time," they are putting it over. The public does respond upon these holidays and by making a direct consumer appeal, as we have planned to do in our advertising, we can create a broader observance of these days and build for our industry new seasons and new demands.

It must be kept well in mind that cooperative advertising, like individual advertising, must be backed up by the right kind of sales effort. A manufacturer cannot sit quietly by and expect the business to come flowing in to him, but if he will create the goods to fit into these seasons and properly instruct his salesmen as to selling them, he will find a responsive public to buy them.

Another idea which the advertising plan embodies is that of establishing the consumer custom of taking home candy for Sunday. Here is an idea that has been proven practical by experiment, and one which will put into every week in the year a new demand. The consumer will not only respond to his own desires but to the expectations of those at home, and when there is heralded all over the country the slogans, "Don't Forget Your Sunday Candy" and "Take Home Candy for Sunday," there will be a ready response on the part of the buying public. This idea ties up most effectively with the dealer educational work, because the retailer will see in it an incentive for weekly displays and weekly sales that will greatly stimulate his business.

What we are striving for is to create new demands, some new reason that the consumer hasn't previously had, and in addition, to build greater demands on the days upon which a candy buying custom is already established.

The tie-up through the salesmen is a practical one, because the idea that goes with the sale is one which the retailer knows will invite consumer interest and demand, and in the proposed plan there is an individual salesman's feature which will help him to properly place before the jobber and retailer each separate idea brought out in the advertising.

Likewise, the plan contemplates reaching the jobber and keeping him informed of what is being done and planned so that he may know how to do his part in carrying out the general objectives.

To the retailer much attention will be given. He will not only be kept fully advised as to the plans and progress of same, but will be told what he should do and how he can do it, to bring to himself the greatest benefits from the work being done.

So you will see that there is a well-built chain, linking together the interest of manufacturer, jobber, retailer and salesman, in the definite purpose and object of serving the consumer when he responds to the advertising directed toward him.

The individual advertiser well knows that his consumer advertising must be sold to his salesmen, and his customers, in order that they may do their part in the distribution of the product advertised, and this is equally true in advertising by an industry.

One of the weakest links in the chain is the lack of appreciation on the part of most retailers of the value of display and pricing. This lack has retarded the proper knowledge of what to do and how to do it and in the plan elaborate preparation has been made to educate retailers in these two fundamentals of candy merchandising. With a more enlightened retailer there will come a broader and more enthusiastic support from the retailer in putting over the manufacturer's ideas.

We stated that the competitive situation would be improved. It will come about first through those in the industry having a constructive purpose upon which they are all focusing their attention and efforts, which will gradually replace destructive efforts; secondly, there will be a more definite relationship between manufacturer, jobber, retailer and salesman. They will all be led to see how their interests are linked one with another—how, through a common purpose, each one according to his share will benefit and that after all they are dependent one upon another and should work with, instead of against, each other. This seems something like the millennium but it is a distinct possibility and has been proven so by other industries.

The public will also be told about the magnitude and importance of your industry—what it stands for in purity of product, in cleanliness in manufacture, in the personnel of its administrative selling and productive forces. This is institutional advertising and aside from enlightening the public as to the industry, it has the indirect effect of creating a favorable and receptive attitude on the part of the public toward the industry and toward its products. We will approach the question of candy as a food, not by simply saying it is a food but by telling the public that candy is a combination of the most universally accepted pure food products, such as sugar, chocolate, nuts, fruits, etc.,

blended together by the Art of the American Confectioner into attractive morsels for the consumer's delight.

The use of colors will be dealt with by showing that nature has set the example by distinctively coloring each of its food products and that the confectioners have but copied an appeal to the eye which nature has for some reason made a necessary part of its scheme of things, and it will be further shown that the colors used by confectioners are certified to by the U. S. Department of Agriculture as to their purity.

Haven't you as an individual thought you would like to do these things? We know you have, and so have hundreds of others in the industry; but none have, because of the very good reason that they couldn't afford to. But through cooperative advertising we can afford to, and after all that is all cooperative advertising is—doing through all for all that which the individual couldn't do himself.

Consumer Advertising

The advertising plan has two divisions, namely, Consumer Advertising and an Educational Program. For the Consumer Advertising national magazines have been selected in order to give to the members of the Association who are scattered throughout the United States, equal benefits from the advertising, and because in relation to the amount of money available in proportion to the number of people to be reached at the least cost, national magazines are the most economical medium in the beginning.

Following is a list of the magazines suggested which will carry the Consumer Advertising. The estimated circulation of this list is thirty million subscribers. Usually three readers are figured to each subscriber, which would give us a total circulation of ninety million readers.

Saturday Evening Post
Delineator
McCall's Magazine
Ladies Home Journal
Woman's Home Companion
Pictorial Review
Good Housekeeping
Liberty
Collier's
Cosmopolitan
American Magazine
Holland's Magazine

Quality Group
- **Atlantic Monthly**
- **Harper's Magazine**
- **Review of Reviews**
- **Scribner's Magazine**
- **World's Life**

Life
Judge
Needlecraft
Woman's World
People's Popular Monthly
Household
Sunset Magazine
Literary Digest
Red Book
Nast Group
- **Vanity Fair**
- **House and Garden**
- **Vogue**

American Boy
Boy's Life
St. Nicholas
Youth's Companion
American Legion Weekly
Cook's Weekly Trio
- **Boy's World**
- **Girl's Companion**
- **Young People's Weekly**

The Saturday Evening Post will probably carry the major portion, or will be the outstanding medium on the list in respect to the space carried. The extent to which these magazines will be used, that is, the size of space—⅛, ¼, ½ page, etc.—and the number of insertions, whether six, eight, or twelve times, will depend entirely upon the amount of money raised.

Copy and illustrations will develop the following points with reference to candy:

1. *The Holidays.*
2. *Candy the Messenger of Sentiment.*
3. *Candy as a General Gift.*
4. *Candy for Birthdays and Anniversaries.*
5. *Candy as America's most popular Food, as America's most popular Gift, as America's most popular Treat.*
6. *Color in Candy.*
7. *Candy for Sunday.*
8. *The Candy Industry.*

Educational Plan

Following is the information on the Educational Plan and the different units making up this program:

Bulletin to Members — A regular bulletin will be sent to members and others to keep them advised of the progress and accomplishments of the campaign and to keep them informed of different matters pertaining to it, such as new merchandising ideas developed, suggestions as to sales tie-ups, etc.

Dealer Helps — Bags: There will be provided for those who desire them, Candy Bags to stimulate the sale of penny, bar and bulk goods on the holidays and other occasions.

Window Posters: Window Posters will also be provided containing merchandising ideas.

Inserts: A series of educational inserts—one insert dealing with the location of the candy department, another with candy display, another with window trimming, etc., will be provided. These will benefit the retailer and can be provided by the manufacturers and jobbers by inserting them in correspondence or in shipments.

Advertising Folio — An Advertising Folio containing the series of advertisements for use of candy salesmen will be provided monthly. The salesman will take this out and spread it before the retailer and jobber to tell them the story of the campaign and to

keep them informed so that they can arrange their selling plans to fit in with the advertising plans.

Local Committees

Committees will be appointed in the important cities and towns in the United States to cooperate with the Association along advertising and publicity lines and will work along educational lines to the benefit of the manufacturers, jobbers and retailers involved. The time is past when retailers, jobbers and manufacturers can go it alone. What is needed is a closer cooperation along definite lines of sales promotion. There are many situations which cannot be met by individual action and can be solved only through group action.

Retail Candy Bulletin

A retail candy sales bulletin will be published. This bulletin will contain ideas and talks on the merchandising of candy as related to display, price, location of candy department, turn-over, the sale and care of candy.

This bulletin will also keep the retailer informed of the national advertising. Illustrations of different displays will be published; also there will be discussions on ethical questions, such as return goods and cash discounts. A great effort will be made to make this bulletin the last word in candy displays and candy sales. The bulletin will carry no advertising and it is simply a constructive feature to assist the retailer and better conditions generally so far as he influences them.

Members of the Association will be asked to send in names of their customers whom they desire to receive this bulletin. The names sent in will be checked to avoid duplication.

Just as manufacturers selling the retailer direct will be asked to send in the list of their retail customers, so will manufacturers selling the jobbing trade get their jobbing customers to send in the names of their retail customers. These lists will be selected lists covering such retailers as can practically cooperate with the general plans.

The value of such a bulletin to your customers is going to be very material and will make of them better candy merchants by increasing their interest in their candy department; and the more candy they will sell as a result of this interest, the more candy you will sell to them.

One of the greatest needs in our industry is better merchandising knowledge upon the part of retailers generally.

This bulletin will be sent out once a month.

Direct Mail Bulletin to Jobbers

A direct mail bulletin to jobbers will inform the jobber about the national advertising and will give him much helpful information to pass along to the retailer. This bulletin will also be constructive along other lines in that an effort will be made to show the jobber on the question of price cutting how he handicaps himself when he cuts prices for any other purpose than to close out a line or clean up odds and ends. For example, the jobber will be shown how if he cuts the price 10% he must do 50% more volume on a 25% margin of profit to break even.

As a result of this bulletin the jobber will be made a more constructive merchandiser and will cooperate more closely with the manufacturer by tieing up his efforts with the advertising and by providing the retail dealer helps and constructive merchandising suggestions. There will be approximately fifteen issues of this bulletin a year to about 15,000 jobbers.

Salesmen's Bulletin

A bulletin for candy salesmen will be published, for both the salesmen of members and salesmen of jobbers, to inform them of the advertising of the Association and to provide them with constructive suggestions to pass along to their customers in connection with the advertising of the Association.

In our general plans the salesman is to be a key man, as he can do much to educate the retailer and to get the jobber to put forth his efforts behind the advertising. The salesman will be interested because by doing this work he can make more money for himself, because he will be increasing his sales through our constructive efforts and on account of the wider consumption and outlet for candy developed by the advertising.

You will agree that in your own case you would want your salesmen to get this bulletin so that they would know what is going on and to work your trade accordingly, so that you will sell more candy because of the intelligent efforts of your salesmen in merchandising the advertising of the Association.

General Publicity Work

It is planned to supply to the newspapers, news items about candy and the industry; to the women's departments and women's magazines suitable copy on the use of candy with meals and in connection with other foods, such as salads, ice cream, etc.; to supply educational booklets on the industry and the food value of candy to teachers and school children; to supply newspapers and medical journals with the dietetic and nutritive value of candy.

See form of pledge on opposite page.

Cooperative Advertising Campaign Pledge

National Confectioners' Association
1921 Conway Building
Chicago, Illinois

Total Amount Pledged, 3 Years

$.....

WE, the undersigned, in consideration of other pledges made by members of the Association, hereby pledge as our share of the expenses of the Cooperative Advertising Campaign of the National Confectioners' Association, the sum of

..... Dollars, to be paid by us, over a period of three (3) years, in the following manner:

(1) One-third of the above amount, being the first year's installment, to be paid in full upon call of Treasurer of the National Confectioners' Association within thirty (30) days from date of said call, provided that said call upon us shall not be made until, in the opinion of the Executive Committee of the National Confectioners' Association, a sufficient total sum has been pledged by all subscribers to the said Cooperative Advertising Campaign to justify the beginning of the first year's advertising.

(2) The installments for the second and third years (each year's installment being one-third of the total amount hereby pledged) shall be respectively subject to call by the Treasurer of the National Confectioners' Association in the same manner as the call for the payment of the first installment hereof, provided that the Executive Committee of the National Confectioners' Association shall order and approve said calls.

(3) In the event of our financial inability to pay any or all of the above stated installments, we shall be released from any obligation under this pledge, except for installments actually paid, upon making a statement to the Treasurer of the National Confectioners' Association clearly showing our inability to make said payments.

Signed .....

By .....

Street & Number.....

City..... State.....

All pledges should be sent to V. L. Price, President National Confectioners' Association, 208 North Broadway, St. Louis, Mo. A record of the pledges will be kept by him for the Executive Committee and for reports to be sent at intervals to members on the progress of the advertising fund.

THIS FOR YOUR RECORD

The Three-Year Pledge

The Advertising Committee and the Executive Committee are anxious to have it understood that the advertising policy is not merely a one year trial. They are recommending it as a definite policy similar to the manner in which advertising is used by any individual manufacturer. Therefore, pledges are being asked for a period of three (3) years.

The results of advertising are accumulative and the greatest results usually come in the second and third years and it should take that long for the advertising to bring to the industry the greatest possible benefit.

Another reason for the three-year pledge is that the advertising must be prepared long in advance and the committee must know, previous to the expiration of each year's advertising, what plans to make for the following year.

However, in the event that the advertising does not seem to have produced what could be reasonably expected in the first year and does not hold forth promise of sufficient results in the judgment of the Executive Committee to continue same throughout the three-year period, no calls, for payments of the installments due after the first year, will be made. There is also the provision that any individual may be released from his pledge, in the event of his financial inability to pay, by making a satisfactory statement of his situation to the Treasurer of the Association.

All pledges should be sent to V. L. Price, President National Confectioners' Association, 208 North Broadway, St. Louis, Mo. A record of the pledges will be kept by him for the Executive Committee and for reports to be sent at intervals to members on the progress of the advertising fund.

Philadelphia Confectioners Insure Purity of Their Products by Adopting Sanitary and Hygienic Control of Manufacturing Plants

Philadelphia Manufacturers of Confectionery and Chocolate adopt plan for sanitary surveys and health inspection service in cooperation with the Philadelphia Health Council, the first and only co-operative effort in the confectionery industry to establish standards of cleanliness, sanitation and hygiene.

by B. K. Wilbur, M. D.
President of H. O. Wilbur & Sons, Inc.

THE control of sanitation of food factories and workers is more and more being exercised by national, state and local governments. The production and sale of milk in many states is carried on under the most vigorous rules and strict inspection. The slaughtering of animals for food is under the control and inspection of the national government. Other food products are produced under similar conditions. The tendency of all governmental agencies is to increase this supervision and control and extend it to many other products.

It is not hard to find the reason for these laws being on the books. It is well known that many manufacturers of almost all food products, for years, failed to follow even the most ordinary and simple rules for cleanliness and sanitation. With better business methods, conditions in past years have been considerably improved, but there are still plants where reasonable rules for cleanliness are not enforced and little attention is paid to this matter. It was to correct conditions like these that such laws were passed and it is because such conditions are not being improved voluntarily as rapidly as they ought to be that additional laws are constantly appearing. As stated by the writer in a recent article in a confectionery trade journal, unless our industry puts its own house in order, we will be compelled to do so by some governmental agency. This certainly will be much less satisfactory to the individual manufacturer than taking voluntary steps to correct conditions.

These facts were brought home to the manufacturers of confectionery and chocolate of Philadelphia by an effort of the health authorities of the city to control the sanitary conditions in candy factories. Inspectors were appointed and some inspections were made. This led to careful consideration of the matter and Messrs. Walter P. Sharp of Stephen F. Whitman & Sons, J. Frank Shellenberger of J. Frank Shellenberger & Co. and the writer were appointed a committee to study the question and make recommendations as to the best way to handle it. Before the matter had gone very far, however, the city decided that at the present time they had not authority to enforce the plans for a sanitary control which they desired and as far as the city health authorities were concerned, further efforts to control were discontinued.

The committee appointed to study the matter were of decided and unanimous opinion that the association ought to take a stand on this matter, even though they were not forced to do so by any health authority either local, state or national. Of course, the local authorities have ample power to act in any condition which is "a nuisance prejudicial to public health." Conditions would have to be pretty bad, however, for them to exercise such authority. No doubt there were conditions which did not begin to approach a nuisance and yet were far from sanitary. In addition to that the committee realized that there was a large opportunity of real service to the employes of the manufacturing confectioners in guiding them in health matters.

A Search Abandoned

The original thought was to employ, on a part time basis, a physician to inspect factories and make physical examinations of employes, but further study of the situation showed that a charitable organization known as the Philadelphia Health Council and Tuberculosis Committee, which is a branch of a national organization, and which we all know by the Christmas seals, already had an organization prepared to take care of such industrial inspection and

Workers in the Factories of the Philadelphia Manufacturers of Confectionery and Chocolate Are Given Health Examinations at Regular Intervals.

health work. It is a part of their program for extending knowledge of health in the community. Stephen F. Whitman and Sons had installed this service more than a year and a half ago and found it entirely satisfactory, and it was in operation in many other industries. The committee recommended that this plan should be adopted by the association and, after considering the matter for some time, the Philadelphia Association of Manufacturers of Confectionery and Chocolate adopted this plan as one of the official activities of the association and a very large majority of the membership voluntarily agreed to install it or one which, in the opinion of the Executive Committee, was equally efficient.

What the Plan Provides

The plan provides for the following:

1. Physical examination of all employes annually and the examination of all new employes at the time of their employment.
2. The services of a physician and nurse, based on the number of employes in the plant.
3. Free medical advice to all employes and surgical attention from the nurse or doctor who are on duty.
4. A follow-up of physical defects and visits of absentees in their homes.
5. Free instruction of first-aid classes in the plant.
6. Sanitary inspection and supervision of the plant.
7. General health instruction by means of posters, lectures, etc.

Since the adoption of this plan, different companies have been installing the health service, H. O. Wilbur & Sons being the first to put it in operation after it was adopted by the association, and continued progress is being made in this way. One or two plans somewhat different from this have been submitted and approved by the officers for different companies. The cost of the work is paid for by the individual manufacturer on the basis of so much per employe and being handled by one organization in this way, where the doctors and nurse can go to a number of plants in the same locality with little loss of time, the cost is not excessive.

A Step in Advance

The adoption of the plan by the Philadelphia confectioners is a tremendous step in advance. It means that all employes in chocolate and candy factories will have a complete physical examination annually and that no new employes will be continued who have not had such an examination. This insures healthy employes and the protection of the public because they are healthy. The inspection of the plan by outside trained observers insures clean conditions where confectionery is manufactured. The free health service is probably the most valuable part of the whole plan. Any manufacturer who takes any interest in his employes knows perfectly well how frequently this class of labor is

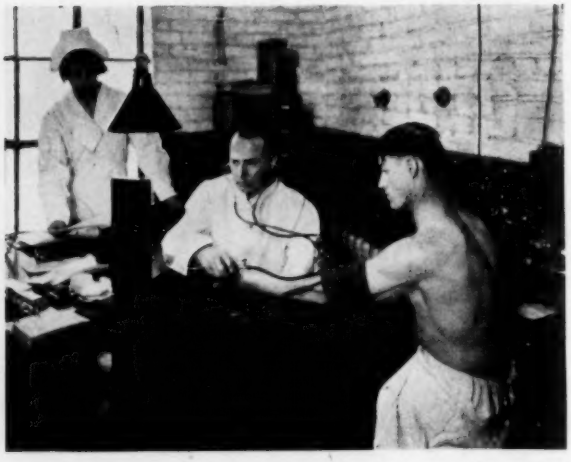

Health Examinations of Candy Workers in Philadelphia in Only a Part of the Service Rendered to the Manufacturers of Confectionery; Sanitary Surveys and Regular Inspection of Factories Is Also Included.

exploited by ignorant or unscrupulous doctors. Here's just one example, shown by the physical examinations in our own plant. Two employes were found wearing glasses and the usual sight-tests showed that they could only read about half as well *with the glasses* as they could *without them*. The plant physician inquired into the conditions and found these glasses were sold by a man who called himself "doctor" and who called at the houses of these people and offered them glasses. He told them that if they would wear these glasses now it would save their eyesight and they would not need such strong glasses as they grow older or perhaps would not need any at all. Of course, this is absolute bunk, and worse than that, because of the eye-strain and the bad effects which go with it and which would result from wearing glasses where no glasses were required.

Head Off Medical Quackery

The nonsense and foolish stories that are told to people who have no knowledge of medical matters and which are readily believed by such people is terrible. Bad treatment and resulting harm that is done by such treatment is far more than is generally realized. While the health service provided in this plan does not interfere in any way with the work of the family physician, it can and will, to a large extent, avoid the bad effects of unscrupulous or ignorant medical men who usually treat many of our factory workers.

If this plan, or something equally as good, were generally adopted by the confectionery trade, as it ought to be, and this is done voluntarily and before the industry is compelled to do so by law, it will put the trade in an enviable position before the public. Candy will then be regarded as an A No. 1 product for cleanliness and sanitation. People have been stung by the sanitation bug and they will not get over it at once nor should they.

The Official Bulletin of the Health Council

The Health Supervision Service in detail as provided for each industrial plant by the Philadelphia Health Council and Pennsylvania Tuberculosis Society is given in their official bulletin as follows:

Industrial Health Units

For the purpose of providing Health Supervision including adequate medical and nursing service and sanitary supervision, to small industrial plants at an expense not out of proportion to cost of such service to large plants, Industrial Health Units will be organized according to the following plan:

THE UNIT: A group of small plants with employes ranging from 25 to 500 each and reasonably near together, providing a total of 1,000 employes, shall constitute a unit. One full time nurse can provide nursing service adequate for such a group of 1,000 employes and the medical service needed can be secured on a part time basis from industrial physicians.

Each plant sharing in the unit service shall agree: (1) To provide a first aid or clinic room at the plant and (2) to pay quarterly their pro-rata share in the maintenance of the unit based on the number of employes.

Health Service Provided for Each Plant

(1) *Physical Examinations* including, (a) Examinations of all applicants for work before or shortly after employment; (b) Re-examination at intervals of employes having physical defects; (c) Annual examination of employes.

(2) *Medical and Surgical Relief* including, (a) Emergency treatment of accidents and minor illnesses occurring at plant and follow up of all compensable cases; (b) Advice as to the correction of defects found upon examination; (c) Follow-up of absentees in their homes by nurse; (d) Cooperation with family physician of sick, injured or defective employes.

(3) *Instruction in First Aid to Sick and Injured* to individuals or groups in each plant.

(4) *Industrial Hygiene and Sanitation* including, (a) Sanitary survey of plant; (b) Sanitary supervision of plant including regular inspection; (c) Health education and hygienic instruction to employes by talks, posters, leaflets, etc.

(5) *General Prevention of Sickness and Accidents* including, (a) Prevention of contagious diseases by detection, isolation and vaccination; (b) Prevention of slight illnesses developing into serious sickness; (c) Diagnosis of early beginnings of serious types of illness, for example, tuberculosis, kidney disease, heart disease; (d) Investigation and advice regarding industrial health problems which may arise; (e) Advice to employer or placing of physically defective workmen at occupations where they can do efficient work.

OPERATING PLAN: Regular visits each week will be made to each plant by physician and nurse each of whom will give an amount of time to each plant determined by the number of employes. Not less than three hours per week of health work for each 100 employes will be provided.

"30% Increase in Profits Without Additional Sales Volume"

by A. C. Nielsen
President, A. C. Nielsen Company, Chicago.

HERE are the facts on "Production Profits" that we promised in a recent issue. For the benefit of the confectionery industry, Mr. Nielsen of the A. C. Nielsen Company has divulged these vital facts which show how increased profits are being earned by certain plants in various industries. All these facts have been secured by the most painstaking personal investigations, and have been certified by the owners of the equipment. This article deals primarily with the generation and transmission of power. In an early issue Mr. Nielsen will give some facts on other phases of manufacture based on specific surveys on the performance of confectioner's equipment.—EDITOR.

A 30 PER CENT increase in profits—and without an increase in sales volume! Tell me how you did it. Where did the increased profit come from?

"Well," chuckled the keen, gray haired man across the table, "I've found a new source of profits. While the other fellows were crying 'More sales, bigger volume,' I turned my attention to within the plant, and soon discovered what I call 'Production Profits.'"

Then this progressive manufacturer unfolded his method—the plan that had produced 30 per cent more profits on the same sales volume. Eighteen months ago when his directors had proposed a drive for more sales, he said:

"Gentlemen, the contemplated campaign, if successful, will tie up $50,000 in equipment, stock and accounts receivable. It will yield a sales increase of $150,000 a year, on which we will probably show a net profit of $7,500, which is 15 per cent of our new investment.

"Now, I've made a survey of our plant, and I find we can invest the $50,000 in improved manufacturing equipment that will pay an average annual return of at least 40 per cent and probably closer to 50 per cent.

"Therefore, I recommend that for the next year we continue our sound sales methods on a schedule that will merely assure *constant* volume—and invest the $50,000 in plant improvements."

He had sold this idea to his directors—and the 30 per cent profit increase resulted. "Production Profits" had provided the basis for his success.

In these days of aggressive selling there is a growing tendency to spend our surplus funds to increase sales without first comparing the possible profits from this source with the earnings that could be made by investing the money in improved equipment.

This is not to be construed as a criticism of efforts to increase sales, but rather as a plea for more careful consideration of the profit-making possibilities that lie in modern equipment and methods—power generation, material handling, building maintenance, and similar functions as well as the manufacturing process itself.

In the painstaking investigations of manufacturing costs and savings, on which Nielsen Surveys are based, our staff engineers frequently encounter instances where improved equipment is repaying its cost every six months. Net annual returns of 100 per cent on the investment are very common.

It is safe to say that we have yet to encounter a plant that has exhausted all its possibilities for production profits. Still we meet, every day, so-called "progressive" executives who have practically closed their ears to the appeals of those who would show them the way to these production profits.

Why this unfortunate attitude? I suppose because it's human nature to think we are doing the best that can be done. We often resent the suggestion that there is a better way than ours—when we ought to thank the one who is trying to help us see the light.

But for executives who approach these pro-

duction problems with an open mind, new sources of profit are constantly revealed.

Profits in Power Generation

Plants generating their own power can often effect substantial savings by turning their attention to the problem of increasing boiler efficiency. Too often the boiler plant is looked upon by the chief executive as a necessary evil. He is interested in the manufacture of candy and knows relatively little about the manufacture of power. Nevertheless, the cost of making his power is an important item, and the subject is well worthy of consideration.

Study the methods of getting coal into your plant. When the Brandle & Smith Company of Philadelphia built their new plant they installed a Peck Carrier to cut the cost of handling coal to a minimum. This equipment handles an average of 130 tons of coal per week at a cost of 40c a ton, from cars to overhead bunkers. Comparison with another plant of about the same capacity shows that the same equipment has effected a net saving of $2,470.52 a year over and above all fixed and operating charges on the equipment. This represents a saving of 32 per cent in the cost of handling coal. In addition, working conditions have been improved, and the firemen can give more attention to the proper maintenance of equipment and the efficient combustion of the coal.

The combustion of coal offers unusual possibilities for economy. For example, the Graham Glass Company of Evansville, Ind., recently installed four CoKal Stokers. By eliminating one man from the boiler plant the stokers have saved $2,995.20 per year in labor. They have also reduced the coal consumption 4,045 tons per year, which brings the total annual net saving to $13,150.02. They were also able to substitute Indiana strip mine coal at $2.10 per ton for the $2.67 grade which had previously been required, thus effecting a further saving of $5,015.13 a year. These savings represent a handsome return on the investment of approximately $4,800.

In the average plant an unnecessary amount of heat is lost in the flue gases which pass up the stack. The Mount Hope Finishing Company of North Dighton, Mass., have reclaimed a large part of this heat by installing two Sturtevant economizers. This equipment saves 1,328 gallons of fuel oil per day, which yields a net annual saving of $10,045.66. This is a net annual return of 60.7 per cent on the investment of $16,500.

Many candy manufacturers would find on close investigation of their power plant that fuel can be saved by keeping the boiler tubes free from soot. While it is very hard to accomplish this with the ordinary method (the steam lance) the job is done easily and effectively by mechanical soot cleaners. A large eastern sugar refinery recently installed eight Vulcan Soot Cleaners at a cost of about $5,000, and saved $26,289.75 a year in fuel and labor cost, thus repaying the entire investment every 2½ months.

Unless the boilers are equipped with instruments for measuring the CO_2 content of the flue gases, it is likely that an excess of air is being supplied to the boilers, and a good deal of your expensive coal is required to raise the temperature of this excess air to the temperature of the flue gases. This loss can be greatly reduced by the installation of CO_2 Recorders. The Aunt Jemima Mill Company, for example, invested $275 in a Republic CO_2 Recorder and effected a saving of $1,390.54 a year, which repays the investment every 10 weeks.

Large savings can also be effected by the installation of boiler meters which give a complete record of combustion at all times. An example of the value of these meters is contained in the experience of the Great Northern Paper Company of Millinocket, Maine, who cut their fuel consumption 4,249 tons of coal annually by the installation of Bailey meters on 22 boilers. Obviously the return on the investment is tremendous.

Profits in the Transmission and Distribution of Power

Regardless of whether the candy manufacturer generates his own power or purchases electric current from outside sources, he has an opportunity to save money through the more efficient transmission and distribution of power within his plant. Here again we can draw on the experience of other industries for our data because the problem of power distribution is quite similar in all industries.

Almost any plant that is still using babbitt bearing hangers for its shafting can effect an important saving by changing to ball-bearing hangers. We have just conducted investigations on this subject in 30 plants, and the following are typical results:

At E. C. Atkins & Company of Indianapolis 500 Skayer ball-bearing hangers are saving $8,424 per year in power cost, which repays their investment in less than two years' time. The Lowell Cotton Mills of Lowell, N. C., are getting an annual return of 50% on the investment they made in ball-bearing hangers, as this equipment saves them $2,019.48 per year in power, lubrication and labor.

Ball-bearing hangers at the Palmolive Company, Milwaukee, have cut power consumption 8%, saving $1,746.78 per year. An even larger saving is effected at the Salt's Textile Company of Bridgeport, Conn., where an investment of

$1,659 in 79 ball-bearing hangers effects a net annual saving of $1,446.97—a 93% annual return on the investment.

Plants using individual motor drives have an equally good chance to cut their power cost through the use of more efficient motors and better methods of transmitting power between the motors and the individual machines.

The Chiquola Manufacturing Company of Honea Path, S. C., are saving $931.52 annually through the use of ball bearings in 176 5-hp. and 7½-hp. motors. These savings are brought about through a reduction of lubricating cost, a saving in floor space, and a reduction in power consumption.

The White-Stokes Company, Inc., of Chicago, whom the readers of this publication all know use about 40 Link-Belt silent chain drives of from 1- to 15-hp. capacity. By installing Link-Belt silent chains on beaters in place of belt drives they have eliminated slippage and breakage, the latter being a particularly important item because breakage of a belt often seriously injured the quality of the batch or spoiled it entirely. In addition to the saving in production cost, the expense of maintaining the drives for 10 machines has been reduced $228.50 a year. This is nearly twice the original cost of the chain drives.

The Chicago Macaroni Company has also found increased profits in silent chain drives which they have installed on seven kneaders. By eliminating slippage these drives have increased production 5% and saved $927.52 a year.

A comparison of silent chain drives with the cost of leather belts for operating 13 freezers at the Goldenrod Ice Cream Company shows a net annual saving of $293.94 in maintenance cost and an additional saving of $136.98 in power.

The facts just given indicate what can be accomplished by careful consideration of the power generation and transmission problem in the average plant. Great possibilities also exist in the matter of material handling, and the specific economies that have resulted in the plants of candy manufacturers through better material handling methods will be discussed in an early issue.

We have also secured some vital data on the savings made by better packaging methods and by the use of improved types of candy making machinery. (Editor's Note.—A summary of these results will appear as a sequel to this article, but some of the complete surveys on the performance of equipment in confectionery plants will appear as a series in later issues this year.)

Indeed, the sources of production profits are legion. So while your sales managers are foraging for greater volume and new markets, turn the searchlight of open-minded investigation on your production methods. Decide on the machine or method best suited for each job in the plant. Then *install* it at the earliest possible moment, for every day's delay is a lost opportunity for more production profits.

News Digest

Gordon-Rainalter Company, Omaha, Neb., has been purchased by a new company known as the Gordon Candy Company. Max Rapp is president and principal owner of the new company; H. H. Merryman is vice-president; E. J. Snyder is treasurer. Mr. Merryman was formerly factory superintendent and Mr. Snyder secretary of the old concern. Mr. Arthur L. Rainalter and Al Gordon have no connections with the new concern.

Riggi Brothers Company, Brooklyn, have sold their factory to H. Baron & Co., New York City, who will occupy the factory for the manufacture of fruit juices and jams.

William Paterson, Limited, Brantford, Canada, are installing new machinery and increasing their production facilities. The controlling interest of the company has been acquired by Messrs. C. S. Edmonds and C. E. Harvey, formerly of Christie, Brown & Company, Toronto. Messrs. Leeming and Paterson have retired from the firm.

The G. A. Duerler Manufacturing Company of San Antonio, Texas, one of the largest candy manufacturing concerns in the South, are planning to erect a $200,000 six-story candy plant, construction to begin very soon. It is also reported that an addition and improvements will be made to the present buildings on Market street.

AMONG THE SUPPLY FIELD:

Albert H. Jones Promoted. After five years of service as an assistant manager of the Pittsburgh office of the Anchor Cap & Closure Corporation, Albert H. Jones has been promoted to be manager of the Cleveland office of this corporation. He assumed his new duties March 1. The corporation manufactures metal caps and machinery for vacuum and air-tight sealing of glass containers.

Bentz Engineering Corporation have established their Chicago office in more commodious quarters at **123 West Madison St.** (Madison Square Building). They were formerly at 1330 W. Jackson Blvd. Mr. W. E. Lowell is in charge, assisted by Mr. Rassmussen, both of whom are accredited refrigerating engineers.

A Dinner Dance for "Fritzsche" Veterans. Benedict F. Zimmer of Chicago and George L. Ringel of Columbus, O., were guests of honor at a dinner dance given last month at the Pennsylvania Hotel, New York, by the employes of Fritzsche Bros. The entire staff of the company's salesmen was brought together from all over America for the first time in the firm's existence of sixty years. The guests of honor had completed twenty-five years of service as vice-presidents. They were duly initiated into a Twenty-five Year Club which now has nine members.

The Association and the Law

The legality of cooperative effort and relations of competitors in organization work, with special reference to the Control of Resale Prices

Excerpts from address delivered at the annual meeting of the Midland Confectioners' Association, Chicago, February 18th, 1926.

by Walter C. Hughes

Secretary-Treasurer, National Confectioners' Association

THE objects and purposes for which the Association is organized, what it does and how it does it are the facts which the courts take into consideration when determining whether its activities are primarily legal or illegal.

Certain Activities Clearly Illegal

There are certain Trade Association activities which are clearly illegal:

1. Selling combinations for the control of the market.
2. Combinations for the purpose of excluding competitors from the market.
3. Agreements to restrict output for the purpose of enhancing the price.
4. Agreements to establish uniform prices.

The question as to whether a Trade Association has done any of these things, especially the question of price control, has been the subject of most of the investigations that have been made by the Federal Trade Commission relative to the activities of Trade Associations.

Competition being the life of trade presupposes individual and independent action in price making.

Any combination agreement or understanding among the members of a Trade Association which has for its object uniform action relative to prices is strictly illegal.

Even if there has been no express agreement or understanding, if what the members do collectively produces a uniform result, an agreement or understanding will be implied.

Price control has been the basis of practically every action that has been brought against a Trade Association.

A New Interpretation of the Law

The decisions of the United States Supreme Court in the so-called Hardwood Lumber and Linseed Oil cases, wherein the trade practices of the Trade Associations representing those two industries were involved, left considerable doubt in the minds of business men as to what activities of a Trade Association were legal and what were illegal.

The court's decision two years later in the Maple Flooring and Cement Manufacturers cases, wherein the decisions in the Hardwood Lumber and Linseed Oil cases were virtually reversed, came as welcome news to all Trade Associations and clarified the legal atmosphere pertaining to trust legislation. There no doubt had been a change in the court's attitude towards certain activities of Trade Associations, but we must not overlook this all important fact that each case was tried on its merits and a slightly different presentation of the same facts might have changed the court's decision.

In other words, the decisions do not give Trade Associations carte blanche to do as they please, far from it, but they do very clearly reaffirm this fact, that it is the intent and purpose and the result of what the association does that

the court scrutinizes most closely, and not the manner of doing it.

Beneficial Trusts

It is, however, a well established legal principle that there is such a thing as beneficial trusts or monopolies, which do not violate the provisions of the Anti-Trust Laws, and which because of efficiency in a particular line are beneficial to the public, the most conspicuous of which are the Telephone and Telegraph Companies.

The trend of Federal legislation and of the Federal court decisions in recent years seem to encourage the development of such monopolies, but it should be clearly understood that they are not encouraged unless they are unmistakably in the public interest.

Rule of Reason

The Federal courts in all of their earlier decisions adhered strictly to the letter of the law and declared as illegal all combinations or monopolies regardless of whether they might have a legitimate purpose.

But the idea gradually developed that such was not the intention of Congress in passing the Sherman Act and that it, therefore, should be reasonably construed. This was the development of the "Rule of Reason" made famous by the decision of the United States Supreme Court in the Standard Oil and American Tobacco Company cases, decided in 1911, wherein the court stated that the "Rule of Reason" was a vital part of the law and that the law prohibited only unreasonable restraints of trade and monopolistic combinations which were inimical to the public interest.

In adopting the "Rule of Reason," the United States Supreme Court differentiated between monopolistic combinations organized for an ulterior purpose, and co-operative efforts of business men to improve and safeguard competitive conditions.

In the words of Justice Brandeis in the Chicago Board of Trade case:

> "The true test of legality is whether the restraint imposed is such as merely regulates and perhaps thereby promotes competition or whether it is such as may suppress or even destroy competition."

The "Rule of Reason" gave the courts wide latitude in the application of the Sherman Act. They had learned that a rigid rule could not be used in construing the intent and purpose of the law.

Legal Activities

In the light of recent decisions, the legal activities of a Trade Association may be briefly summarized as follows:

The collection and dissemination of information:

1. Pertaining to Cost of Production.
2. Pertaining to Volume of Production.
3. Pertaining to stocks of merchandise on hand.
4. Pertaining to the freight rates from point of shipment to points of destination but not for the purpose of establishing uniform freight equalizations or allowances.
5. Prices pertaining to closed transactions but not identified as to the individual members quoting such prices.
6. Promotional work such as Trade Advertising, Research Work, Standardization, Educational Work, Code of Ethics, Arbitration, Improvement of Working Conditions and General Welfare Work.
7. Exchange of credit information but not for the purpose of collective action or maintaining "black lists" or lists of so-called "undesirables" such matters to be left solely to the decision and action of the individual member.

Finally on the question of the collection and distribution of price information even in reference to closed transactions, a word of caution is advisable.

It is highly important that there should be no attempt or possibility of an implication of an attempt to reach an agreement or concerted action relative to such prices or that they should in any manner whatever be instrumental in bringing about uniformity of action on the part of the members of the association.

By far the safest plan is to leave prices and price discussion severely alone.

CONTROL OF RESALE PRICES

A DECISION of the greatest importance to all industries was recently handed down by the United States Circuit Court of Appeals of the Second District.

The American Tobacco Company had petitioned the court to review an order issued by the Federal Trade Commission to cease and desist from certain practices which the commission had found to be unfair methods of competition in Interstate Commerce.

The American Tobacco Company for some time prior to the action taken by the Federal Trade Commission had refused to sell any wholesale dealer or jobber who refused to maintain the prices at which the company "suggested" its products should be sold to the wholesale and retail trade. In other words the company refused to sell "price cutters" and the Federal Trade Commission issued a cease and desist order, from which the company appealed.

The attitude of the American Tobacco Company is shown in a letter written by the vice

president of that company, a part of which is quoted in the court's decision as follows:

"* * * as far as this company is concerned, we are greatly interested in the matter and regret to see the tendency towards price cutting. We feel very definitely here that the manufacturer can step in by refusing shipments or withholding orders from the demoralizers and thereby assist those legitimate jobbers who desire to make a profit."

The company, therefore, refused to sell jobbers who were price cutters *but it did not concern itself with the prices at which its goods were sold by the retailers to the consumers.* Neither did it enter into any agreement or understanding with any other manufacturer.

The court in reviewing the facts stated that:

"Because of the practice which had developed amongst the jobbers of selling to the retailers at a price so low as not to allow a reasonable profit and in many cases of no profit at all, it came about that a considerable number of the jobbers who previously had been handlers exclusively of tobacco products added side lines such as candies, groceries, chewing gum and other things to their tobacco products. This was regarded by the Tobacco Manufacturers as a great detriment to their business as naturally it lessened the interest the jobber had in tobacco products.

"The result was that in many sections of the country the tobacco jobbers were not only not making a reasonable profit but were selling their goods at an absolute loss. This naturally caused great dissatisfaction among the jobbers and led them to form local associations among themselves in the hope that they might remedy what they regarded as evil conditions in which they were involved."

In the proceedings before the Federal Trade Commission, the president of the American Tobacco Company testified that it was the policy of his company to cease selling any customer, "when it thought he was injuring its business," and that the business of the company, "only begins to be endangered when either the retailer or the jobber does not make a living wage."

In commenting on the testimony the court said that:

"The American Tobacco Company bluntly told its jobbers that if they were not interested in making a fair profit and for motives of their own elected to sell at less than a living profit the company would feel at liberty to remove them from the list of direct customers."

As to the legal right of the company to adopt such policy the court said:

"In other words, its policy was to uphold and support the price of its products as fixed in a particular locality by the wholesalers or jobbers therein. The facts show that where wholesalers allowed a greater discount than that which they themselves in their association had agreed upon the business in the particular locality was demoralized and they were deprived of a fair and legitimate profit. To protect its own interests and enable the jobbers to make a reasonable profit it simply refused to sell to jobbers who sold to the retailers with a greater discount than the Wholesalers' Association had approved. We see nothing unlawful in the policy which the American Tobacco Company pursued."

The prices at which the retailers sold the company's goods to consumers were in no way involved in this case.

The company sold its goods to the jobbers without any express agreement with them as to the prices at which they would sell to the retailers or any agreement as to the prices at which the retailers should sell its goods to the consumers.

The retailers were free to sell to the consumers at whatever price they desired to quote. The company at no time fixed the prices at which the retailers were to sell its goods to the consumers and it did not concern itself with those prices.

The company acted individually and independently. It did not enter into any agreement or understanding with any other company relative to the jobbers whom it refused to sell for the reason that they were cutting the prices on its products.

It nowhere appears that the company entered into any agreement with other manufacturers to establish prices at which it would sell its goods to the wholesalers, jobbers or retailers. It acted independently, which is a most important point to be kept in mind. In other words, it acted by itself without regard to any other company.

Quoting from the decision of the U. S. Supreme Court in the Colgate case, the court stated:

"In the absence of any purpose to create or maintain a monopoly, the Act does not restrict the long recognized right of a trader or manufacturer engaged in an entirely private business to freely exercise his own independent discretion as to the parties with whom he will deal. And of course he may announce in advance the circumstances under which he will refuse to sell."

The court also stated in its opinion that:

"The examination of the testimony convinces us that what the American Tobacco Company is shown to have done is so far removed from constituting an unfair method of trade, that it actually tended to promote fairness of trade and the suppression of unfairness in competition. We have read this record carefully and are constrained to hold that in pursuing the course the American Tobacco Company adopted, we fail to discover anything 'unfair' or 'unreasonable' or in any way contrary to public policy."

There are four important points in this case which should be clearly understood:

First—That jobbers who cut prices could not be regarded as desirable customers for the reason that they would be willing for their own shortsighted selfish interest to sacrifice the company's business welfare and the business welfare of the other jobbers who would secure a fair and reasonable profit and who would be desirable customers.

Second—The right of the company to refuse to sell jobbers who cut its suggested prices was affirmed by the court.

Third—The prices at which the retailers sold the company's goods to the consumers were in no way involved in the case.

Fourth—And most important of all, that the company acted independently and individually and did not enter into any understanding or agreement with any other competing company.

The court's decision is based on sound legal principles and if followed and upheld by other courts, as it probably will be, is one of the most important court decisions to the business interests of this country that have been handed

down in recent years. It upholds the right of a manufacturer to refuse to sell "price cutters" who demoralize the conditions in the industry by selling at prices which those in the industry regard as insufficient to enable the business to be conducted with reasonable profit.

It is also worthy of special mention that subsequent to this decision the Federal Trade Commission has dismissed "without prejudice" several similar cases which were pending on its docket against other tobacco companies.

Laws Should Be Obeyed

If men would spend as much time devising ways and means of obeying laws as they do in devising ways and means of avoiding or disobeying them, the courts would have little to do.

It is human nature to try to avoid that which interferes with freedom of action and freedom of conduct if such interference is, in the opinion of the individual, a trespass upon his personal liberty and inalienable rights.

But laws are made for the purpose of controlling and benefiting society as a whole and regardless of the views of individuals they should be obeyed.

To disregard the law is to undermine the very foundation upon which this great government was built.

The minority must abide by the will of the majority in a democratic form of government or return to the fast disappearing monarchical despotism of minority control.

I have little respect for the individual who willingly disregards the law merely because he believes it should not be the law. As long as it is the law it should be conscientiously observed and obeyed.

However, in reference to the laws that we have been discussing it was not a question as to their literal interpretation and enforcement but the real question had to do with their construction and application and the intent of Congress in passing them.

The recent decisions of the United States Supreme Court to which I have referred have brought to business men, harassed by the unwise attempts of the government to literally enforce these laws, a welcome relief and a comforting sense of security in the wisdom and integrity of the highest legal tribunal in the world —the Supreme Court of the United States.

The Program of the Candy Quiz

(*Continued from page* 21)

II. As a Result of These Developments During the last Few Years the Candy Industry Finds Itself in a Period of Destructive Competition Resulting in Demoralization Along the Following Lines:

(a) General breakdown in the confidence of the manufacturer and established candy jobber in the motives and methods of his competitors.
(b) Lack of confidence in reasonable candy values and promiscuous price cutting.
(c) Unwise credit extensions.
(d) Development and encouragement of free deals.
(e) Abuses of established sales terms.
(f) General piracy of new pieces, brand names and packages of candy.
(g) Dissatisfaction of candy salesmen calling on the retail trade direct from manufacturer.
(h) Curtailment of reasonable profits to large numbers of general line candy manufacturers.

III. How May the Candy Industry Best Meet These Conditions and Along What Lines Should Future Development Be Encouraged?

1. Shall we encourage and promote widespread sale of candy in inexpensive packages under identified brands?
2. Shall we encourage the demand for such candy products through individual advertising, local and national?
3. Has the recent trend toward the sale of identified and advertised candy merchandise been in line with the development of other important food products?
4. Shall we endeavor to restore the large distribution and sale by independent retailers of a large volume of bulk chocolates and other bulk goods whose origin is not identified to the consumer and if so, how?
5. Should the independent retailer be encouraged as an important factor in the distribution of candy?
6. If so how can we help him overcome the huge advantage of his retail competitors who buy candy merchandise at "jobbers prices?"
   (a) By selling him ourselves direct at "cut prices?"
   (b) By supplying him through the small irresponsible "jobber?"
   (c) By supplying him through the "cash and carry"?
   (d) By absorbing his losses when he fails?
   (e) By supplying him with advertised candy which is sold to "all retailers" at one fixed price on which he can get a quick turnover?
   (f) By other methods?
7. Should manufacturers establish fixed resale price on their goods sold under identified labels and insist that such resale prices be maintained.

"Greater Returns from Human Capital"

—in four parts—

Every Successful Superintendent or Foreman A Four Way Salesman

Every production department head—or pivot man—has a big selling job. The prevention of gossip and feeling of discontent, with its heavy tolls on the cost sheet, is largely a matter of "selling" the workers on the house. One of the essential duties of the superintendent or foreman is to keep the workers sold on their job and stimulate their pride in candy craftsmanship and their faith in the industry of which they are a part. A good superintendent will therefore check up on his ability as a salesman as well as a production man—this article tells why.—Editor.

written exclusively for The Manufacturing Confectioner

By Seth Seiders

President, Seth Seiders, Inc.

How Does He Get Away With It?

BILL and Al, employes of a large eastern confectionery manufacturing establishment, happened to be working near an open window on the street level, one fine morning last May, when the president of the company was driven up in his car. It was 11 o'clock.

It was a good car in which the president rode. It had had good treatment. It glistened in the sun. The chauffeur wore a uniform.

The president is one of these "young-old" men—with lithe, alert figure and young face, but with hair prematurely gray. He has a good color and looks extremely "fit." It is evident that he spends enough time in the open to keep in trim physically.

He was, that morning, as always, well groomed. He wore his clothes "with an air"—as one accustomed to being correctly tailored. And as he stepped from his car, and, after a word to the driver, walked briskly toward the entrance, it would have been apparent to the most casual passer-by that here was a prospering business man. Success was "written all over him."

Bill and Al noticed all that, and, after they had finished watching the president enter the building, they looked at each other and smiled. Bill shook his head.

"How do they do it?" he asked Al.

"You can search me," grinned Al. "Some fellows have all the luck!"

In another part of the shop, a few minutes later, Bill chanced to meet the superintendent. He stopped the latter and exclaimed:

"Pretty soft—being president of this company seems to me. I just saw Mr. Allen wheel up in his million-dollar car, with his fancy driver. Just in time for lunch! He'll probably sit around here till the middle of the afternoon, swappin' yarns with some of the big pen pushers upstairs, and then wheel back home in that private 'Pullman' of his. Pretty soft! I certainly wish I had a job like that! Nothin' to do till tomorrow!"

If the Chief Executive Could Have Made His Own Answer

We have often wondered how many executives—who by years of study and anxious toil have built up sucessful businesses—have ever stopped to think of the importance to them of the answer which one of their Pivot Men gives in reply to a remark of that kind from one of the workers!

Remarks like that are being made every day in business institutions everywhere. They represent the attitude of the average worker toward the head of the business—

"Pretty soft! Maybe he earns his money, but I have my doubts. How does he get away with it?"

Of course, the head of the business cannot be there to give the answer. In the first place, remarks such as this are made behind his back. And even if he did hear them—even if he did know that they were being made—he would

have time for nothing else if he were to attempt to meet and mingle with his workers, make their acquaintance, win their friendship, and bring them to understand the weight of the responsibilities he carries. In other words, *there aren't enough hours in the day for him personally to "sell" his own individuality, character, purpose, sincerity, enthusiasm, ideas and ideals to the workers, upon whose sympathy, understanding, co-operation and loyalty the success of his business so largely depends.*

That "selling job" must be done by his Pivot Men—his superintendents, department heads, foremen, group leaders by whatever title—the men who represent the higher management to the workers—the men who, to the rank and file, *are the Firm!*

For, in this day, Pivot Men, if they are to manage their groups in a way that makes for the real success of a business, must be something much more than "bosses" vested with the authority to maintain discipline—to force production through on schedule and hold down costs, regardless of method. Broad visioned concerns have found, and are finding, that profitable management of men involves constant development of qualities of leadership in Pivot Men—understanding of workers' motives, attitudes, viewpoints, likes, dislikes and prejudices—and the ability to shape and guide each employe's thinking and action along lines profitable to the firm.

But to return to the incident of Bill and the president, what answer did the Pivot Man give?

The real Pivot Man knows that the surest way to cure a "grouch" is to have the worker "get it off his chest" without delay. The Pivot Man listens patiently, sympathetically, and, where the worker has just cause for complaint, sees that the trouble is removed. Where the grievance is a fancied one, the Pivot Man shows the worker wherein he is mistaken. But he never allows a grouch to grow through continued nursing.

Envy and ill-will among workers constitute one of the major sources of misunderstanding and friction, in any organization. The capable Pivot Man soon detects the cause of irritations of this kind, and quickly relieves them by explaining to the envious worker how mistaken his viewpoint is, and how much it is costing the department and the firm, and harming the worker's chance for progress.

Fortunately, this superintendent had had the benefit of the first few weeks of training in man management which the company is providing for the heads of its groups. He had the correct answer at the tip of his tongue, and it took him only a few minutes to show Bill, the cynical one, why it happened that the president occasionally got down to the plant a little later in the mornings than the others—that the president had a great many duties which did not appear on the surface—and why Bill had reason to be glad that Mr. Allen was the head of the business.

Bill hunted up his friend Al, a little later in the morning, and they had a confidential talk which not only swung them back into step with the organization and gave them new enthusiasm for their jobs and the firm, but removed the last, lurking vestige of danger of their starting gossip and stirring up discontent—two of the most costly practices that can creep into any body of workers.

In other words, *this "Pivot Man" had "sold" Bill and Al on the firm.* He had demonstrated that, in at least one of the four essential respects, he was a real salesman. And, in so doing, he had more than rewarded the higher management for its pains in providing the means of giving its Pivot Men the larger and more profitable conception of their jobs.

That's the Pivot Man's "selling job" Number 1.

One of the most valuable attributes of the capable Pivot Man is his ability to bring out suggestions from his workers for the betterment of the business. The sketch above illustrates an incident in a western textile mill, in which a short-sighted Pivot Man rejected a worker's idea, which later went to a competitor. The latter, during the first year, realized $78,000 on the idea.

The Superintendent's Selling Job No. 2

IN THE second place, a successful Pivot Man —a man who gets the largest results at the least cost to his employers—must be able to *sell the worker on the job.*

By that we mean that he must know how to bring home to the worker the usefulness, the worth-whileness, the importance of the work he is doing—how necessary it is to the work of the department and the firm as a whole—and then to prove to him that when he does his work with understanding, intelligently, with full knowledge of what he is about, he contributes more largely to the firm's prosperity and so more largely to his own.

That's "selling job" Number 2.

How well prepared is the average candy superintendent or foreman to do it? Or, suppose he is prepared, how often does he take the trouble to "make the sale"?

We are reminded of the story of the old railway employe whose duty it was to tap with a hammer the wheels of the passenger cars before each train departed from the division point.

A traveler, taking the air up and down the station platform while a train was waiting, drew the old man into conversation.

"How long have you been working at this job?" he asked.

"Twenty-four years next March," was the reply.

"Why do you tap the wheels with the hammer?" was the next question.

"Blamed if I know," the old man answered with a puzzled expression. "Nobody ever told me, and I never asked."

That story may be an old one—told generally for no other purpose than to get a laugh, but it has its point and moral.

The veteran employe's "Pivot Man" had not done his job of "selling"—and, in failing to do so, he had not only cheated the worker out of any pride or enthusiasm for his job, but for all those years he had jeopardized the lives of thousands of passengers.

If he had at the start explained to the man with the hammer that he was to tap the wheels in order to see from the sound, whether they were all solid, in good condition—that his job was safety—that he was the guardian of the well being of every passenger riding on that road—what a different story that man would have had to tell the traveler!

You can well imagine him declaring, pridefully:

"When I get through sounding these wheels, you and all the rest of the passengers can be sure there'll not be an accident between here and the next division point on account of a broken flange or a cracked tire! I can spot a bad one the minute this hammer hits 'er. There hasn't been a mishap they could blame on me in twenty-four years. I know my job—I am the best wheel-tapper on this road—and I wouldn't trade places with the superintendent!"

Every job, from highest to humblest, is necessary to the department and the firm—and when it is not done with intelligence, interest and enthusiasm, right there is a weak link in the chain—the chance for trouble, an inevitable leak, an addition to costs.

A worker doing a small, but highly technical operation in a middle-western manufacturing plant grew careless and made a miscalculation which cost the firm several hundreds of dollars.

Asked by the exasperated superintendent how he ever could have been so indifferent, he burst out:

"Great Scott, how was I to know that those decimal points were so important? Nobody ever told *me*. I supposed those formulas were checked after they left me. Why didn't you *say* they made the mixtures on my specifications?"

Selling job No. 2 had been ignored—and the firm paid for it.

No. 3—Sell Yourself to the Workers

THE third respect in which a successful Pivot Man must be a good salesman lies in the fact that he must "sell" himself to his workers—for how can he "sell" them on the firm or their work unless he enjoys their respect, confidence and loyalty?

And how are these things to be gained?

They are to be gained, first, in the case of a candy foreman (or forelady) by his demonstration that he is a master of the technique of his job—that he is a capable workman, knows good performance when he sees it, will be quick to detect results which are less than 100 per cent satisfactory, and that, furthermore, he can, at a moment's notice, take his place at any machine or table in the department and handle the work correctly.

Second, he must prove by his intelligent handling of all the human element problems arising in the day's work, that he not only understands man management, but is managing the department on the basis of equality and justice to all.

He must know how to handle quickly, quietly and effectively such troublesome problems as lack of interest, lack of teamwork, ignorance of the job, gossip and rumor, worry, indifference, anger, mistakes, obstinacy, errors, buck-passing, instability and the scores of other negative human tendencies that cause friction, confusion and loss—and handle them in such a way that his decisions do not leave a trail of ill-will in their wake.

All of these he must handle through personal salesmanship—the ability to appeal to the worker's self interest in such a way that the desired results are obtained and the worker's confidence and respect for the Pivot Man are increased at the same time.

Selling job No. 3 truly is a science in itself—but it is a science that is being mastered by many Pivot Men and Women through the cooperation of their employers, to the great gain of the employers who are providing that cooperation in order to make of their department heads what they should be—Leaders of Men.

Selling Job No. 4

FINALLY, the successful Pivot Man must know how to sell the worker on himself and his ability not only to do the job, but to make it a bigger job, and grow with it.

Thousands and thousands of potentially good workers are doing their tasks timidly, uncertainly, haltingly and slowly—making mistakes and contributing to waste that runs into big figures in a year's time—barely "getting by"—adding to overhead and piling up the expenses of production—because they lack confidence in themselves.

And where does the responsibility for this rest?

It rests, of course, with Pivot Men, who do not know how to lay the hand of encouragement and inspiration upon the shoulders of perplexed workers, give them new insight into their own capabilities, *bring out the best that is in them—and turn it to the profit of the firm.*

This, too, is a "selling job," and the successful Pivot Man knows how to do it—and does it.

He is able to do it, first of all, because he has been schooled to an understanding of human nature—knows how to "size up" his individual workers, find the particular trait or traits to which he can most effectively appeal, bring to the surface the individual characteristics which he can enlist in building up confidence, accuracy, sureness and speed. And having found those special qualities, he knows how to capitalize them.

In brief, he is master of selling job No. 4—and his firm profits richly from his skill.

The chief reasons why so many firms are getting such small returns on their payroll investment is that the majority of department

The shrewd Pivot Man is introducing the new employee to one of his fellow workers—making him "feet at home" the first morning on the new job. Previously he had given him a frank, friendly, man-to-man talk on his opportunities with the firm. Nothing contributes more to enlisting a new worker's enthusiasm for the job and the organization. It is a big factor in reducing labor turnover.

GOOD CANDY

GOOD candy is **made,** not "wished for." To get quality **out** you must put quality **in** your candy. In other words, the ingredients tell the story.

We cannot build a good house with poor materials, neither can we make the best of candy without putting in the very best ingredients. Candy manufacturers who have built up permanent, successful businesses are just as jealous of their reputation as they are of the quality of their candy. In fact, one goes hand in hand with the other.

In making the very best candy you not only have the satisfaction of knowing it, but of realizing it in the matter of sales. The little saving that may be effected in the purchase of ingredients may be very expensive in the matter of "repeat" sales. Therefore, the best is none too good for quality candy and added sales.

STILLE Candy Glaze is a quality product, guaranteed to conform to all U. S. Pure Food Laws. It carries our own special guarantee as well to be and do precisely what is claimed for it. By improving your finished candy product it will naturally improve its sale. It will impart to your confectionery a high gloss finish that makes for better eating by using it for hard and pan candies and fudges.

Why not have the best possible results in your product and your sales when you can easily do so with STILLE GLAZE?

At Your Service.

E. T. STILLE CO.

2343 GREENVIEW AVE. CHICAGO

heads have never been given opportunity to learn how to do this four-fold job of selling.

The responsibility, therefore, lies with the higher management, which has not been awakened to the certainty of additional profit through closer worker co-operation. And closer worker co-operation can come only through education of superintendents, foremen, foreladies—the "Pivot Men" in the organization. Is it fair to a Pivot Man to make him, as we said in a preceding article, the head of a business-within-the-business, hold him accountable for results—and then leave him to work out his own salvation, with no guideposts to show him the way of progress in the management of his most important factor, the human factor? How can the head of a business expect the managers of his groups to produce for him according to his high standards of economy, quantity and quality when he leaves them thus in the dark regarding the vital phase of their jobs? Little wonder it is that in so many businesses there is much needless misunderstanding, cross-purpose, failure to co-operate and other sources of irritation, worry and loss!

Education of Pivot Men is not an over-night task. It takes time. Nothing can be accomplished by a single lesson or a single meeting —any more than a concern can hope to sell its product by publishing one, lone advertisement. It must make a complete campaign, drawn up with care, executed with skill, and "keeping everlastingly at it." There must be a constant battering down of negative thoughts and methods with positives. Every message must show the Pivot Man how it is to his advantage to adopt sound, workable, proved methods. And he must be shown *how* as well. The lessons must be specific and to the point. And there must be untiring repetition.

When a firm proceeds thus in thorough-going fashion, just as it proceeds with its advertising and sales, results upon which the accounting department can put its fingers invariably follow.

Thousands of concerns throughout America are proving it daily.

(*Continued next issue.*)

WHAT'S NEW?

New Patents

1,571,365. Confection-Coating Machine. Alonzo Linton Bausman, Springfield, Mass., assignor to National Equipment Company, Springfield, Mass., a Corporation of Massachusetts. Filed Jan. 30, 1924. Serial No. 689,439. 3 Claims. (Cl. 198-20.)

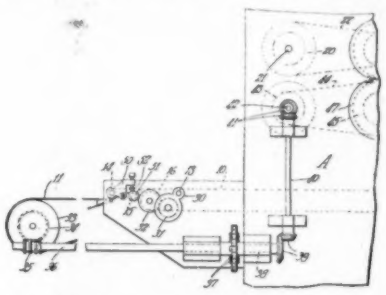

1. In a confection coating machine, a conveyor on the upper stretch of travel of which freshly coated confections are carried and to which the latter cling as the conveyor passes to its lower stretch of travel, whereby the coated articles hang upside down from the conveyor as it enters its lower stretch of travel, conveying means in part underlying said stretch to receive the confections therefrom, and means for successively removing the confections from said conveyor when the latter arrives at a predetermined point in its lower stretch of travel, and causing them to fall upon said conveying means in substantially the same sequence and arrangement in which they were carried by said conveyor.

1,572,071. Candy-Cutting Machine. Philip B. Laskey, Marblehead, Mass., assignor to William B. Laskey, Brooklyn, N. Y. Filed Aug. 30, 1923. Serial No. 660,243. 6 Claims. (Cl. 107—20.)

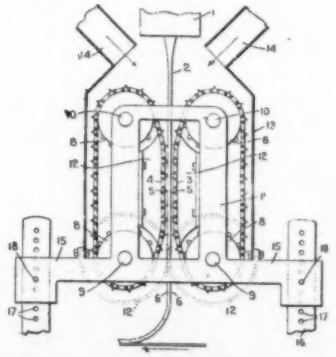

2. The combination with a candy extruding machine, of a cutting device to indent the candy strip at predetermined intervals as it issues from the extruding machine, and means to deliver an air blast on to the cutting device and also on to the candy strip before it is acted upon by said cutting device.

1,573,078. Confection and Method of Making the Same. William A. McCool, Traverse City, Mich. Filed June 11, 1924. Serial No. 719,387. 2 Claims. (Cl. 99—16.)

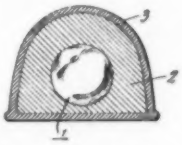

2. The herein described method of producing candies having centers of natural sour red cherries which includes placing fresh pitted cherries in sugar to produce a syrup, treating the cherries and syrup with an agent for neutralizing the fruit acid, providing each cherry with a coating of fondant, and providing each fondant coating with an outer coating of hard non-porous edible material.

1,573,832. Machine for Preparing Chocolate for Confection Coatings. Perley A. Hilliard, Wollaston, Mass. Filed May 6, 1925. Serial No. 28,530. 8 Claims. (Cl. 126—343.5.)

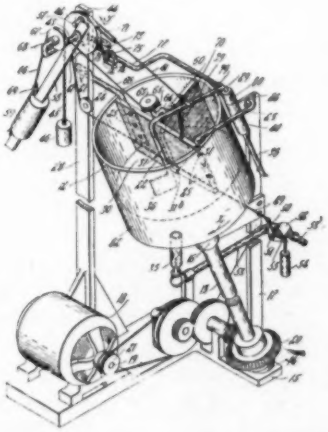

1. A chocolate-preparing machine comprising a rotary kettle having an inclined axis, means for heating the kettle, means for rotating the kettle, and a fixed divider subdividing the kettle into a higher and a lower compartment, the divider being separated at one side of the axis from the kettle, so that melted chocolate may flow from the higher to the lower compartment, and in contact with the kettle at the opposite side of the axis, so that melted chocolate is prevented from returning to the higher compartment and is automatically stirred, the lower compartment being adapted to permit the dipping of centers therein.

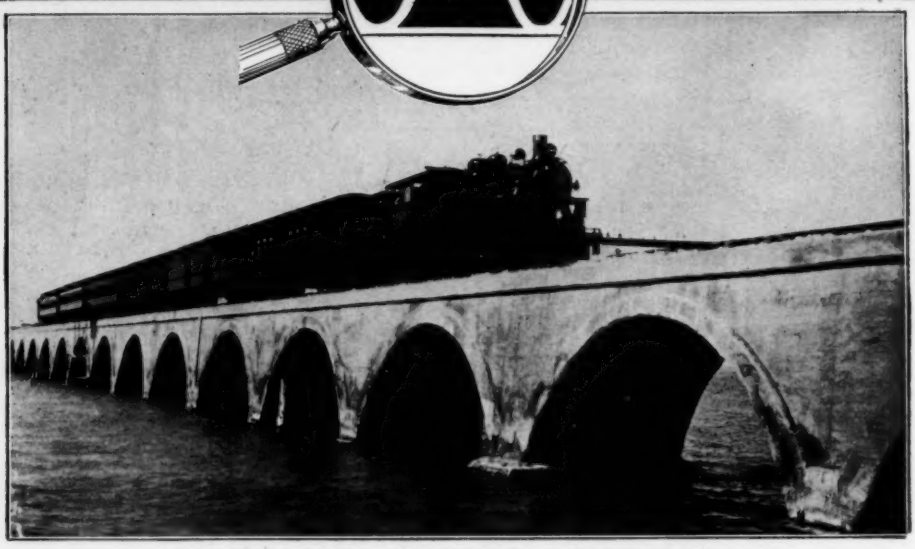

View of world famous viaduct south of Long Key on the Florida coast. An all-arch construction.

You Can Depend On Mid-West Boxes

The greatest possible degree of safety and protection to the goods shipped—that should be the standard requirement of every buyer or shipper who places an order for corrugated boxes.

And the buyer can determine if he is using the right kind of a box **only** by checking up on performance. If you are using Mid-West corrugated shipping boxes you will find husky, well built units, aggressively resisting and absorbing pressure, shock, vibration and abuse for the greatest possible protection to your goods.

The increasing use of Mid-West Boxes in your field is entirely due to their filling a need—
BETTER

High, strong arched corrugations; highest test liners conforming to strictest railroad requirements; expert construction based on intimate contact with shippers' problems for years—these are your assurance that Mid-West corrugated boxes are dependable—the best your money can buy. Make your next order read Mid-West for a fair, square trial of real tried and proved merit.

Write for our free illustrated "Perfect Package" book.

MID-WEST BOX COMPANY

GENERAL OFFICES
18th Floor, Room 51
CONWAY BLDG., CHICAGO

Corrugated Fibre Board Products

FACTORIES
ANDERSON, INDIANA
KOKOMO, INDIANA
FAIRMONT, W. VA.,
CIRCLEVILLE, OHIO
CHICAGO CLEVELAND, O.

1926

es

Y

DIANA

ND, O.